MI987

LGA1150 4th Generation Intel® Core™ i7/i5/i3 Processor Mini-ITX motherboard w/ Intel® Q87 PCH

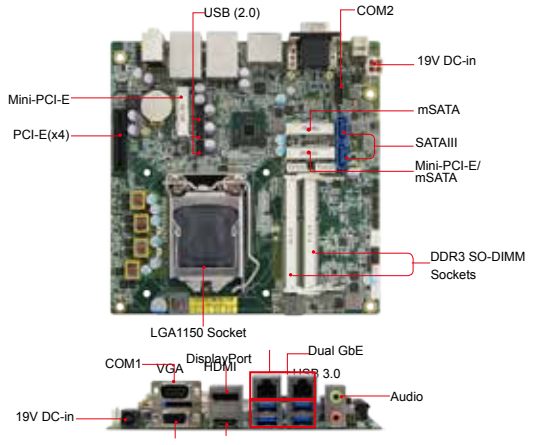

Features

- 4th Generation Intel® Core™ i7/i5/i3 processor (maximum 45W TDP), up to 2.7GHz
- 2x DDR3-1600 SO-DIMM, Max 16GB
- Supports VGA,HDMI and DisplayPort
- 2x Intel® PCI-E Gigabit LAN
- 4x USB3.0, 6x USB2.0, 2x COM, 2x SATA III
- 2x Mini PCI-E slots, 2x mSATA , 1x PCI-E(4x)
- Watchdog timer, Digital I/O, iAMT(9.0), TPM(1.2), iSMART

System

CPU	4th Generation Intel® Core™ DT i7/i5/i3 processors (Max. 45W TDP)
System Memory	2x DDR3-1600 SO-DIMM, Max 16GB (Non-ECC)
System Chipset	Intel® Q87/H81
BIOS	AMI BIOS
Watchdog Timer	256 levels
SSD	2x mSATA
H/W Monitor	Yes
Expansion Slots	1x PCI-E(4x) slot 2x Mini PCI-E (1x full-sized, 1x half-sized)

Graphics

VGA Controller	4th Generation Intel® Core™ DT i7/i5/i3 processors integrated graphics
VGA Memory	Max. Shared memory – 1024MB
Display Interface	Support VGA, HDMI and DisplayPort

LAN

Controller	MI987AF: Intel® I217LM Gigabit LAN PHY MI987EF: Intel® I217V Gigabit LAN PHY Intel® I211AT PCI-E Gigabit LAN(as 2nd LAN)
Connector	2x RJ45 with 4x USB 2.0 on board

Multi I/O

I/O Chipset	Nuvoton NCT5523D 1x RS-232/422/485 (Jumperless selection) 1x RS232, 2x SATA III
USB	MI987AF: 4 ports USB3.0 on board 6 ports USB2.0 via pin header MI987EF: 2 ports USB3.0 & 2 ports USB2.0 on board 4 ports USB2.0 via pin header
Audio	Intel® Q87/H81 PCH built-in HD audio controller + Realtek ALC662 w/ 5.1 channels
Others	19V DC-In, Digital I/O, TPM 1.2, iSMART

Mechanical and Environmental

Dimensions	170mm x 170mm (6.7" x 6.7")
Max. Power Requirement	Intel® Core™ i7-4770TE 2.30 GHz w/ 2x 2GB DDR3-1333 +19V: 6.08 A
Operating Temperature	0°C~60°C (32°F~140°F)
Storage Temperature	-20°C~80°C (-4°F~176°F)
Relative Humidity	90% (non-condensing @60°C)

Ordering Information

MI987AF	LGA1150 Q87 Mini-ITX motherboard w/ VGA, HDMI, DisplayPort, dual Gigabit LAN, TPM 1.2, iAMT9.0, iSMART
MI987EF	LGA1150 H81 Mini-ITX motherboard w/ VGA, HDMI, DisplayPort, dual Gigabit LAN, TPM 1.2, EuP/ErP, iSMART

Dimensions and Drawing

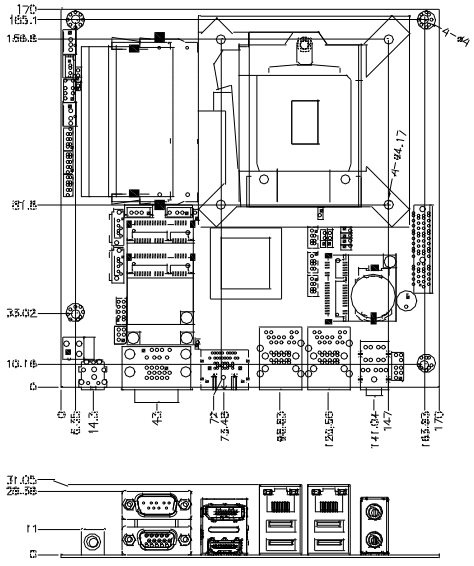

iBT Technologies inc.

Tel. (514) 832-0808
Toll Free: 1 (866) 590-4288
www.ibt.com